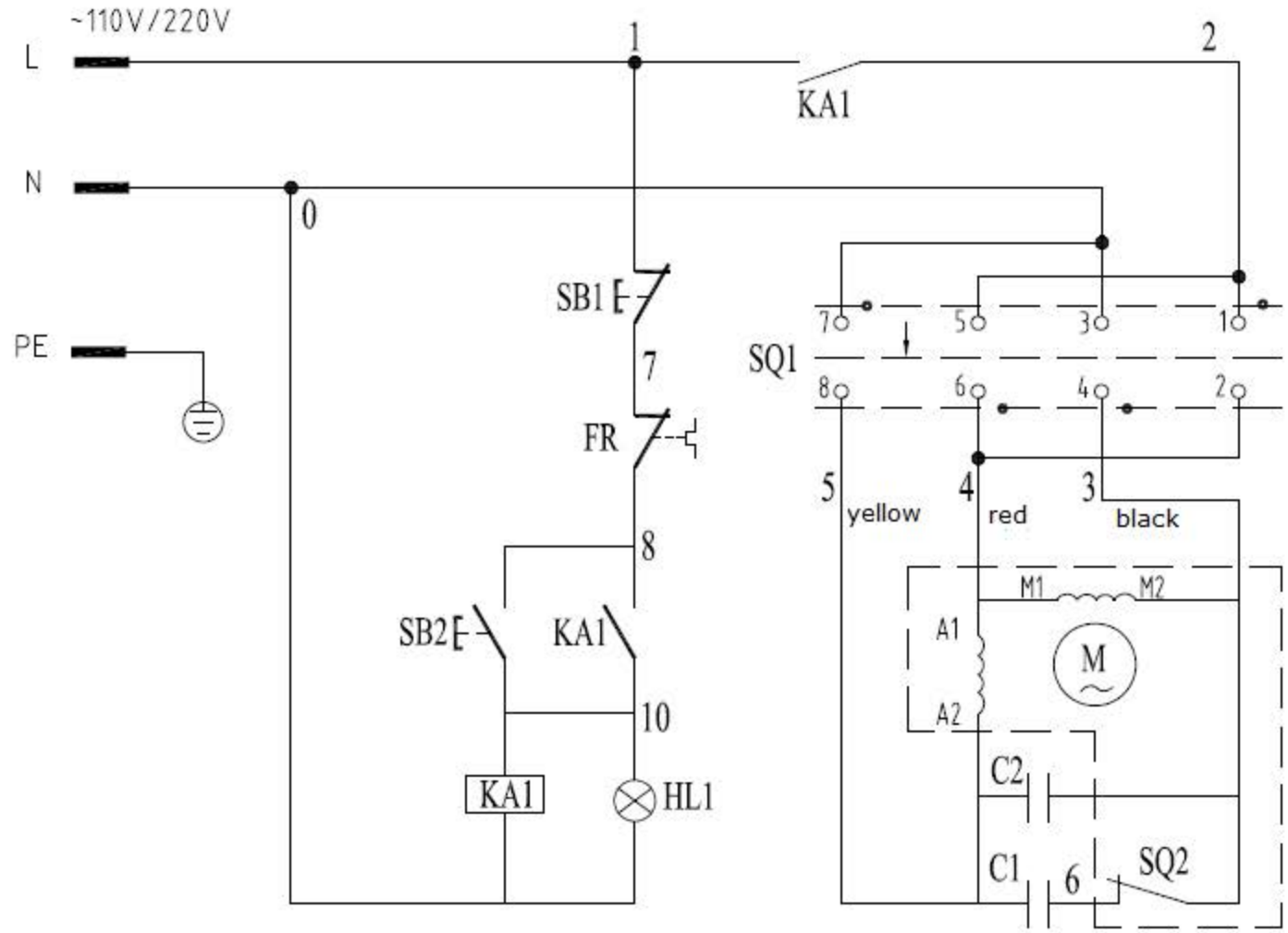

SB1 stop button
SQ1 reverse switch
SB2 starting button
C1 starting capacitor
FR overload protection
C2 running capacitor
KA1 relay
SQ2 centrifugal switch

electric diagram	
meat mincer	
1:1	

Model No